AFEMS Working Document on the Marking of Ammunition

Introduction

The Association des Fabricant Européen de Munitions de Sport (AFEMS) - Association of European Manufacturers of Sporting Ammunition - is a non-profit organisation which was set up in 1951. With 60 members and affiliates from over 30 European countries, AFEMS represents a network of manufacturers and distributors of ammunition, components, clay targets and machinery, each boasting vast experience and a long history in the industry.

The mission of AFEMS is to strengthen dialogue and cooperation among its members, and to safeguard and represent their interests to the relevant decision-making bodies. AFEMS is regarded as the sole spokesperson and representative for the entire European ammunition industry and undertakes active dialogue with governments and institutions to contribute, through its expertise, to the drafting and implementation of legislation and technical solutions on the production, classification and distribution of civilian ammunition and related products.

This working document, which is a follow-up to the earlier AFEMS' position paper on the issue of the marking of ammunition, will provide an overview of EU legislation to demonstrate that the manufacturing of civilian ammunition is already well regulated. The paper will also describe the marking and package labelling requirements which already exist and which can be used for tracing purposes. Many ammunition manufacturers in the EU are already required to follow these requirements for military and civilian markets.

Overview of EU legislation on civilian ammunition

The first European provision that deals with ammunition for the civil market, even if only marginally, is **Council Directive of 18 June 1991 on the control of the acquisition and possession of weapons 91/477/EEC**, the so-called 'Firearms directive'. This not only prevents, in Annex I, para II, cat A, nos. 4 and 5, citizens from possessing certain types of ammunition ('*Ammunition with penetrating, explosive or incendiary projectiles, and the projectiles for such ammunition*' and '*Pistol and revolver ammunition with expanding projectiles and the projectiles for such ammunition, except in the case of weapons for hunting or for target shooting, for persons entitled to use them*'), but also establishes that '*the arrangements for the acquisition and possession of ammunition shall be the same as those for the possession of the firearms for which the ammunition is intended* (Article 10).

These provisions are still in force, although the original directive, as we will see, has been extensively amended and subsequently recast.

Council Directive 93/15/EEC of 5 April 1993 on the harmonization of the provisions relating to the placing on the market and supervision of explosives for civil uses, while containing an explicit derogation from the application of its general provisions to ammunition, confirmed the applicability of Articles 10, 11, 12, 13, 17, 18 and 19 to these products. In particular, Article 10 concerned the intra-community transfer of ammunition and related procedures, including the indication of the mandatory nature of CIP marking for the transfer. Other applicable rules essentially concerned the potential to exercise public powers of supervision over transfers and their entry into force. The directive ceased to be valid on 20 April 2016, as it was repealed and recast as Directive 2014/28/EU.

Directive 2014/28/EU of the European Parliament and of the Council of 26 February 2014 on the harmonisation of the laws of the Member States relating to the making available on the market and the supervision of explosives for civil uses, also provides that ammunition is excluded from its scope, with the exception of Articles 12, 13 and 14. These articles substantially reiterate the rules already provided for in the previous recast directive.

Directive 91/477/EEC was subsequently amended by **Directive 2008/51/EC of the European Parliament and of the Council, of 21 May 2008, and by Directive (EU) 2017/853 of the European Parliament and of the Council, of 17 May 2017, eventually recast by codification in Directive (EU) 2021/555.** Over the years, the legislation on civil firearms has expanded to include numerous provisions relating to ammunition for the civil market, including a complete definition (Article 1, paragraph 1, No. 3), provisions on the marking of the elementary packaging (Article 4, paragraph 2), and expressly including ammunition in the discipline on the control of the acquisition and possession of weapons and their parts.

On 31 May 2001, in New York, the United Nations Protocol against the Illicit Manufacturing of and Trafficking in Firearms, Their Parts and Components and Ammunition, supplementing the United Nations Convention against Transnational Organized Crime, was adopted. Through Council Decision 2001/748/EC, of 16 October 2001, it was established to sign the Protocol on behalf of the European Community. Although some parts of it were implemented with the aforementioned Directive 2008/51/EC, subsequently recast in Directive (EU) 2021/555, the implementation of the legislation on export was achieved through the adoption of **Regulation (EU) no. 258/2012 of the European Parliament and of the Council, which,**

indeed, implements Article 10 of the Firearms Protocol. The regulation perfectly equates firearms, parts ('essential components') and ammunition for export to third countries, establishing a general discipline immediately applicable throughout the Union.

Before the adoption of Regulation (EU) no. 258/2012, a practice was in place according to which European political decisions on the export of military weapons were applied to the exports of (arms, parts and) ammunition for the civilian market. In particular, the European Union Code of Conduct for Arms Exports was adopted on 2 June 1998 by the General Affairs Council, later replaced by the **Council's Common Position 2008/944/CFSP, of 8 December 2008, defining common rules for the export control of military technology and equipment.** This practice was certainly illegitimate, since these decisions were and are related exclusively to products or equipment of a military nature. The adoption of Regulation (EU) no. 258/2012 should exclude the possibility of applying CFSP decisions to the civil sector, as the direct exercise of the regulatory power of the Union excludes the possibility of applying any other provision and also excludes national competence on the matter; nevertheless, article 10, para 1b of the same Regulation provides that Member States, in deciding to grant an export authorisation, take into account, inter alia, foreign policy and national security considerations, including those to which Common Position 2008/944/CFSP applies. This wording, albeit unfortunate, cannot transpose the content of the decision within EU legislation, the application of which must still take into account the principles of adequacy, subsidiarity and proportionality.

To manufacture civilian ammunition, it is necessary to have government authorisation.
All ammunition manufacturing companies are well controlled by their national authorities. This includes onsite inspections of registers which contain data on all items manufactured and delivered, as well as related national, regional and international licences. Licences are only released to reliable importers, dealers or government agencies following strict governmental and polices checks which seek to verify personal or companies' records and the socio-political situation of the country of destination.

<u>Military vs. civilian ammunition production processes</u>

As already explained in the earlier AFEMS position paper, production for military and civilian markets in the EU follow two completely different processes.

While the production of ammunition for the military market is, in principle, based on specific orders and tenders from governments which can be customized upon request (a business model which is nevertheless evolving due to the rise of new conflict areas), civilian

ammunition is based on large production volumes and stocks, from which orders placed by distributors are subsequently processed.

Military ammunition manufacturers in EU member states which are also part of NATO must also follow NATO standards for the marking of ammunition and packaging.

Similarly, civilian ammunition manufacturers in EU member states that are part of the Commission Internationale Permanente pour l'Epreuve des Armes à Feu Portatives (Permanent International Commission for the Proof of Small Arms – commonly abbreviated as CIP), must follow its provisions for the marking of ammunition and the labelling of packages. The same applies also to EU and non-EU member states which are not CIP members but wish to place their products in the CIP market.

A. NATO standards on ammunition marking and how military tenders are managed

The NATO standard AOP-2[1] 'Identification of ammunition' sets up the provisions for the marking of ammunition. Annex B of this standard defines the minimum requirements for the marking of ammunition <20mm calibre and the colour coding for the bullet in order to identify the ammunition type (e.g. bullet tip painted in red for tracer bullet, in black for armour piercing bullet etc).

The minimum requirements for head-stamp marking on the base of the cartridge case are:

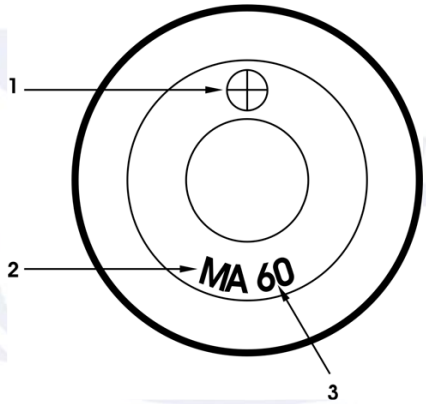

Fig. 1 NATO markings on the cartridge's head-stamp

1. NATO DESIGN MARK (the cross in the circle) (if applicable)
2. Manufacturer's initial or recognized identification letters
3. Last two digits of year of manufacture of complete round

[1] NATO AOP-2(C): The Identification of Ammunition

Additionally, Annex D of the AOP-2 NATO standard provides the reference for minimum packaging marks for NATO ammunition:

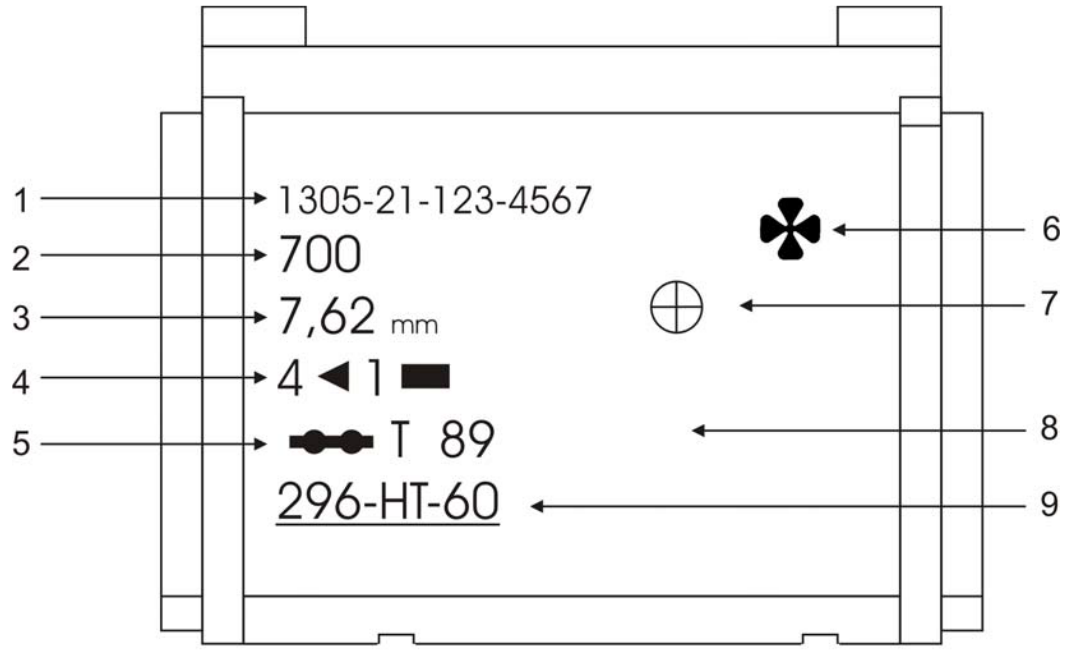

Fig. 2 NATO markings on the packaging

1. NATO stock number
2. Quantity of ammunition
3. Calibre of ammunition
4. Symbols for nature of bullet, as packed (e.g. tracer, ball, AP etc): when the pack contains a mix of bullets the appropriate symbols are used to show their arrangement.
5. Symbols for type of pack (e.g. lined, bulk etc)
6. NATO symbol of interchangeability (if applicable)
7. NATO design mark (if applicable)
8. Model of link (if linked ammunition)
9. Lot number, being the serial number of the lot, manufacturer's initials or recognized identification letters and the last two digits of the year of manufacture or packing (this information to be positioned in accordance with national practice)

Military tenders are managed by a working team that analyses at 360° the specifications of the tender (administrative requirements, technical requirements, legal aspects).

B. CIP marking standards for civilian ammunition

The *Commission Internationale Permanente pour l'Epreuve des Armes à Feu Portatives* (CIP) is an international organisation established in 1914 which sets standards for safety testing of small arms and ammunition for the civilian market.

It includes members from the national governments of 14 countries, of which 11 are European Union member states.

The CIP ensures that all firearms and ammunition sold to civilian purchasers in member states are safe for users. Under this framework, rules are provided for ammunition marking and packaging labelling.

Regarding ammunition, CIP 'test markings' require that all cartridges, including re-filled cartridges, must bear the following marks[2]:

Fig. 3 FIOCCHI cal 9-mm Luger markings on cartridge's head-stamp

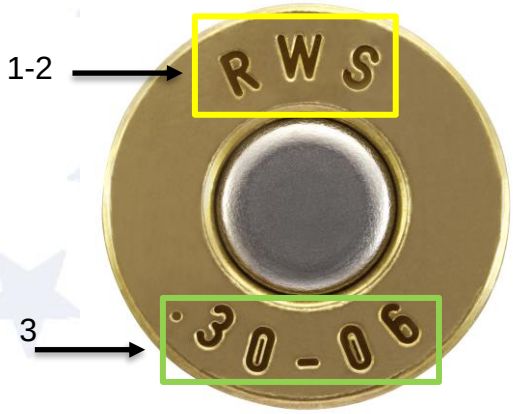

Fig. 4 RWS cal .30-06 markings on cartridge's head-stamp

1. The identity of the cartridge manufacturer or the person who re-filled them or the person guaranteeing them.

[2] CIP, 2014. 3. Testing of ammunition: 3.1. Testing of Commercial Ammunition [XV-7].

2. Identification must be provided by a manufacturer's mark, or a mark of origin applied in indelible fashion either to the base or the casing.
3. On the base of centrefire ammunition, the calibre, in compliance with C.I.P. nomenclature. If it is impossible for technical reasons to show the calibre on the base, it may be marked in indelible fashion on the body of the casing.

Additional markings may be applied for specific ammunition (high-performance ammunition, lead-free ammunition etc).

As for the labelling of the packaging, the elementary packaging of commercial ammunition must bear the following information:

Fig. 5 FIOCCHI cal 9-mm Luger markings on the packaging

Fig. 6 GECO cal .357 Magnum markings on the packaging

1. Factory name or brand of the manufacturer or of the person for whom the ammunition was produced and who accepts responsibility for its compliance with current regulations.
2. Trade name or standard appellation.
3. Batch identification number and the quantity of ammunition contained in the basic package.

Additional information may be included for specific ammunition (high-performance ammunition, lead-free ammunition, proof cartridges etc).

The basic principle of these provisions is to give users information enabling them to identify the ammunition, and to allow manufacturers to set up an investigation into possible defects in a certain production lot. **However, these markings can also be useful for security purposes as they allow the identification of the ammunition.**

Conclusions

While the idea of marking every single cartridge may seem, at first glance, to be the simple solution, experience shows very clearly that in practice it will not achieve the stated goals.

We are all familiar with how terrorists and criminal groups handle illegally acquired small arms and ammunition: in most cases, despite the latest available technologies, firearms traceability is lost when serial numbers are removed. The same fate will certainly await illegally acquired ammunition.

In addition, for the industry and law-abiding users, the proposal to mark every single cartridge with the lot number represents a bureaucratic, impractical effort that cannot be properly controlled, and which would only be to the detriment of these dedicated individuals, operators and institutions.

In other words, **the cost and effort of marking every single cartridge with additional information would outweigh the benefits**.

Besides, existing standards like those established by NATO or the CIP provide markings on ammunition and requirements for the labelling of packages that already include a series of elements that may be useful for tracing purposes.

All ammunition produced in the EU for the military, police, hunting, sports and industry is manufactured in batches with the defined maximum batch size given a unique batch number. This batch number already provides unambiguous traceability.

The legal requirements already in place mean that ammunition manufacturers and national authorities which issue export licences are already able to know at any time the final destination of a product. Consequently, if a product is re-exported, then the competence and responsibility fall on the national authority issuing the export licence.

A F E M S Association of European Manufacturers of Sporting Ammunition - AISBL
Rue Th. De Cuyper, 100 - B1200 Brussels

Secretaiat Viale dell'Astronomia, 30 - 00144 ROME - Italy
Tel. +39.06.5903510 - Fax +39.06.54282691 - Email: secretariat@afems.org